| REV | ZONE | LTR | DESCRIPTION | DATE | REVISER | APPD |
|---|---|---|---|---|---|---|
| | | | | | | |

## COMPONENT,MATERIAL& SURFACE TREATMENT

(1).SHELL
1.BRONZE
2.NICKEL 1.27um(Min.)

(2).CONTACT
1.BRONZE
2.NICKEL 0.51um(Min.)
3.Au 0.05um(Min.)

(3).DUMMY CONTACT
1.BRONZE
2.NICKEL 0.51um(Min.)
3.Au 0.05um(Min.)

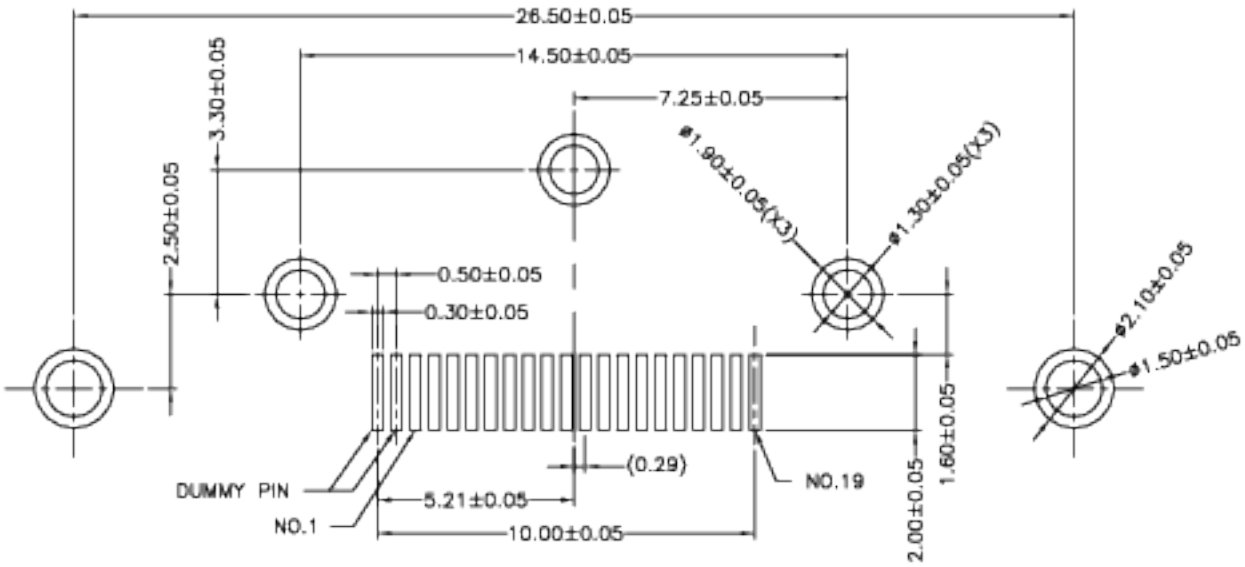


RECOMMENED P.C.B. LAYOUT(T=1.6mm)

## REMARKS:

1. MATERIAL:
1.1 INSULATOR: THERMOPLASTIC UL 94V-0 RATED,COLOR: BLACK
1.2 CONTACT: COPPER ALLOY
1.3 SHELL: COPPER ALLOY
1.4 BRACKET: COPPER ALLOY
1.5 DIRTYPROOF: THERMOPLASTIC UL94V-0 ,COLOR: BLACK
2. PLATING:
2.1 CONTACT:
GOLD PLATED OVER NICKEL ON
CONTACT AREA AND GOLD OR TIN
PLATED OVER NICKEL ON SOLDER TAILS
2.2 SHELL& BRACKET:
SOLDERABLE NICKEL PLATED

3. MECHANICAL:
3.1 INSERTION FORCE: 4.5KG MAX
3.2 WITHDRAW FORCE: 1.0~4.0KG
4. ELECTRICAL:
4.1 CONTACT CURRENT RATING: 0.5A
4.2 VOLTAGE RATING: 40V DC
4.3 DIELECTRIC WITHSTANDING VOLTAGE:
500V AC FOR 1 MINUTE
4.4 INSULATION RESISTANCE : 100 MEGAOHMS MIN
4.5 CONTACT RESISTANCE: 30 MILLIOHMS MAX
5. ENVIRONMENTAL:
5.1 OPERATING TEMPERATURE : -25C°~+85C°

*RoHS compliant*

| | | | |
|---|---|---|---|
| MATERIAL | TOLERANCE UNSPECIFIED<br>.xxx ±0.05<br>.xx ±0.10<br>.x ±0.40<br>. ±0.80<br>ANGLE ± 1° | Contitec Electronics Ltd. | |
| FINISH | DRAWN SY 8/10.11<br>DESIGNER<br>CHECKED SKY<br>APPROVED Dived | SCALE 1:1 / UNIT mm<br>NAME HDMI RECEPTACLE VERTICAL SMT TYPE<br>DRAWING NO. R-S151V-69 | SHEET 2/2<br>REV 1.0 |
| | | A4 | RS151V692 |