CS-32
ROTARY SELECTOR SWITCHES (SMD)

■ PACKAGING SPECIFICATIONS

<Taping packaging specifications>

● Taping version is packaged in 500 pcs. per reel. Orders will be accepted for units of 500 pcs., i.e., 500, 1000, 1500 pcs., etc.

Maximum number of consecutive missing pieces = 2
Leader length and reel dimension are shown in the diagrams below:

● CS-32ZETA and ZETB versions are boxed with 4 reels (2000 pcs.). CS-32ZETG and ZETH versions are boxed with one reel (500 pcs.)

● Embossed tape dimensions

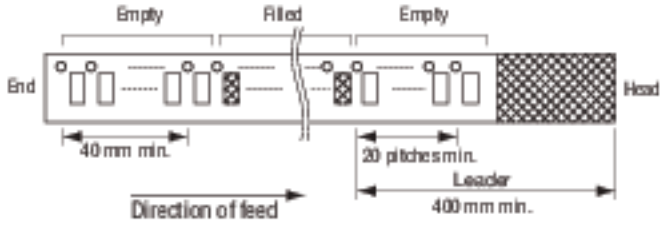

● Reel dimensions

(Unit: mm)

(Conforms to JIS C 0806-3)
(In accordance with EIAJ ET-7200A)

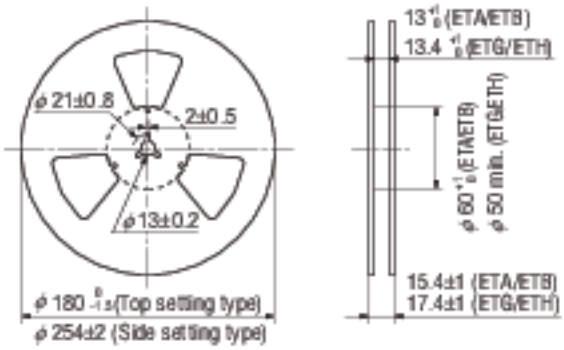

● CS-32-12ZETA/CS-32-12ZETB

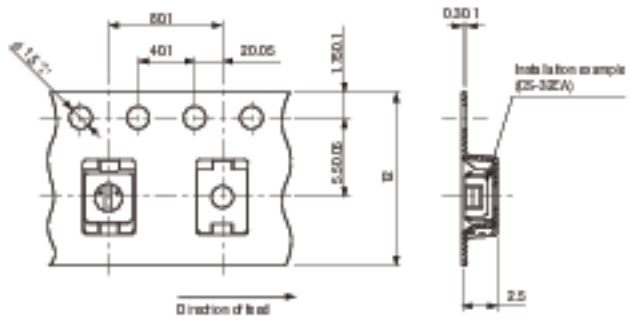

● CS-32-12ZETG/CS-32-12ZETH

(Unit: mm)

(Conforms to JIS C 0806)

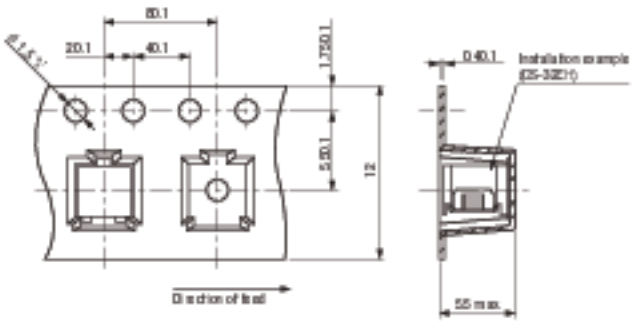

<Bulk pack specifications>

● The smallest unit of bulk pack in a plastic bag is 10 pcs. per pack. Orders will be accepted for unit of minimum 10 pcs., i.e., 10, 20, 30 pcs. , etc.

● Boxing of bulk in a plastic bag is performed with 100 pcs. (standard 500 pcs.) per box.