Contitec Electronics Ltd.
Schatzbogen 33
81829 München

Tel. +49 89 99 81 86 30
Fax. +49 89 3219 50 75
eMail: sales@contitec.com
web: www.contitec.com

Component Specification

Product : Speaker
Part Number : CA-SM2974A-0805P
Drawing No : KF3.001.530

Content

Notes:
This specification is subject to change or withdrawel without notice

This part is RoHs 2011/65/EU compliant

1. General

Speaker highly suitable for industrial applications.

2. Electrical and Acoustic Characteristics

No	Items	Specification
	Impedance	8Ω ± 15% (1Vrms a 2Khz)
	Sound Pressure Level	93dB ± 3dB 0.1W/0.1M average at 0.8,1.0,1.2,1.5kHz
	Resonance Frequency	500Hz ± 20% at 1V
	Frequency Range	f0~4KHz
	Input Power	Rated 0.5W / Max. 1W
	Distortion	<5% Max. at 1kHz/0.1W
	Buzz and Rattle	Should not be audible buzzes, rattles when the 2V sine wace signal swept at frequency range.
	Polarity	When supplied plus D.C. voltage to (+) terminal, the cone diaphragm must move to forward.
	Dimensions	29x7.4 mm
	Weight	6.5g
	Operating Temperature range	-30~+70 ºC
	Store Temperature range	-40~+85 ºC

3. Test Circuit

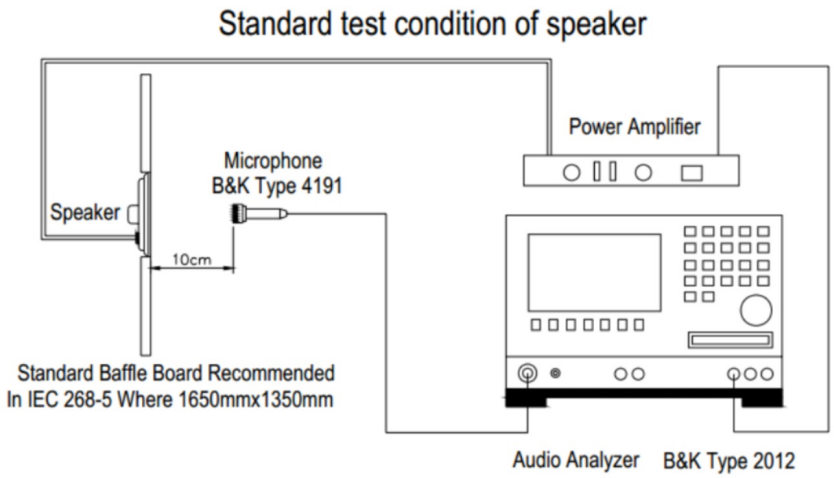

Test Conditions:
Temperature: 15-30 ± 3ºC
Relative humidity: 25% ~ 80%
Atmospheric pressure: 860 to 1060mbar

4. Frequency Response Curve

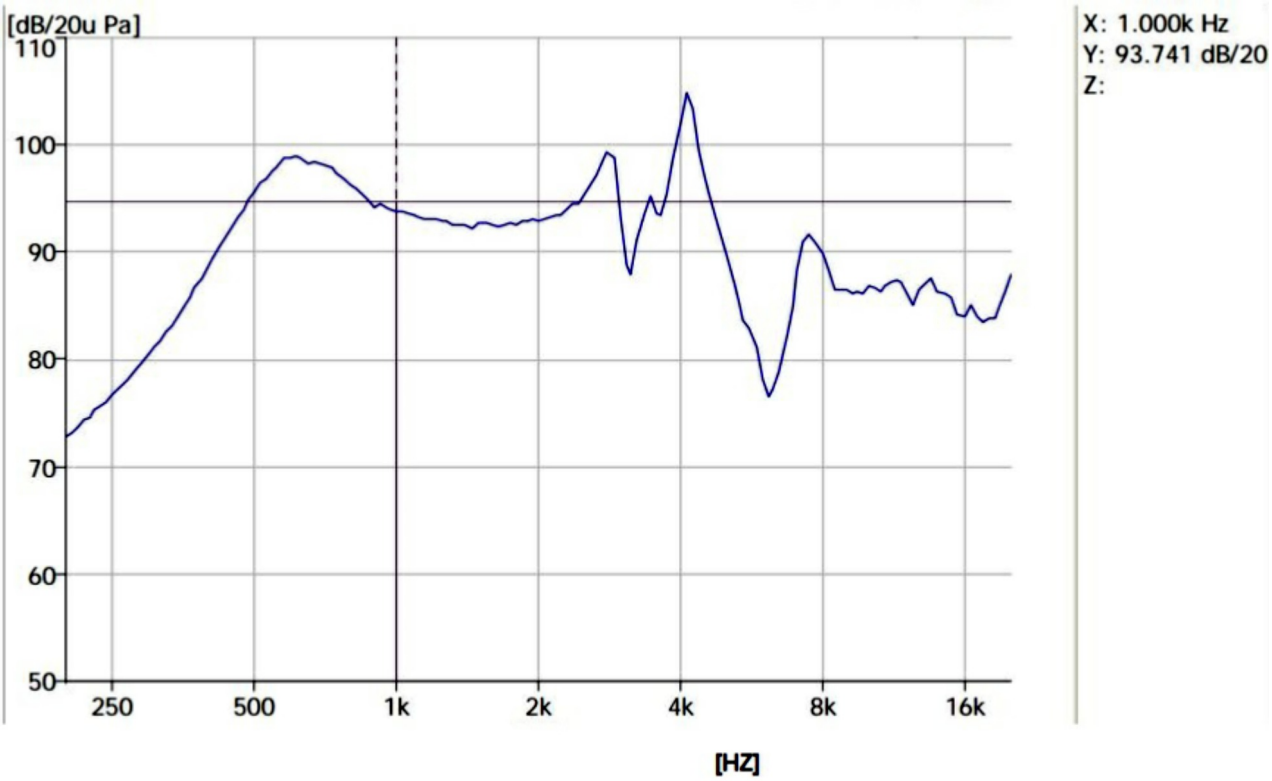

1 . 0	13/07/16	Preliminary	L. Chen	S. Ge	G. Schubert
Revision	Date	Notes	Drawn by	Checked by	Approved by

5. Dimension

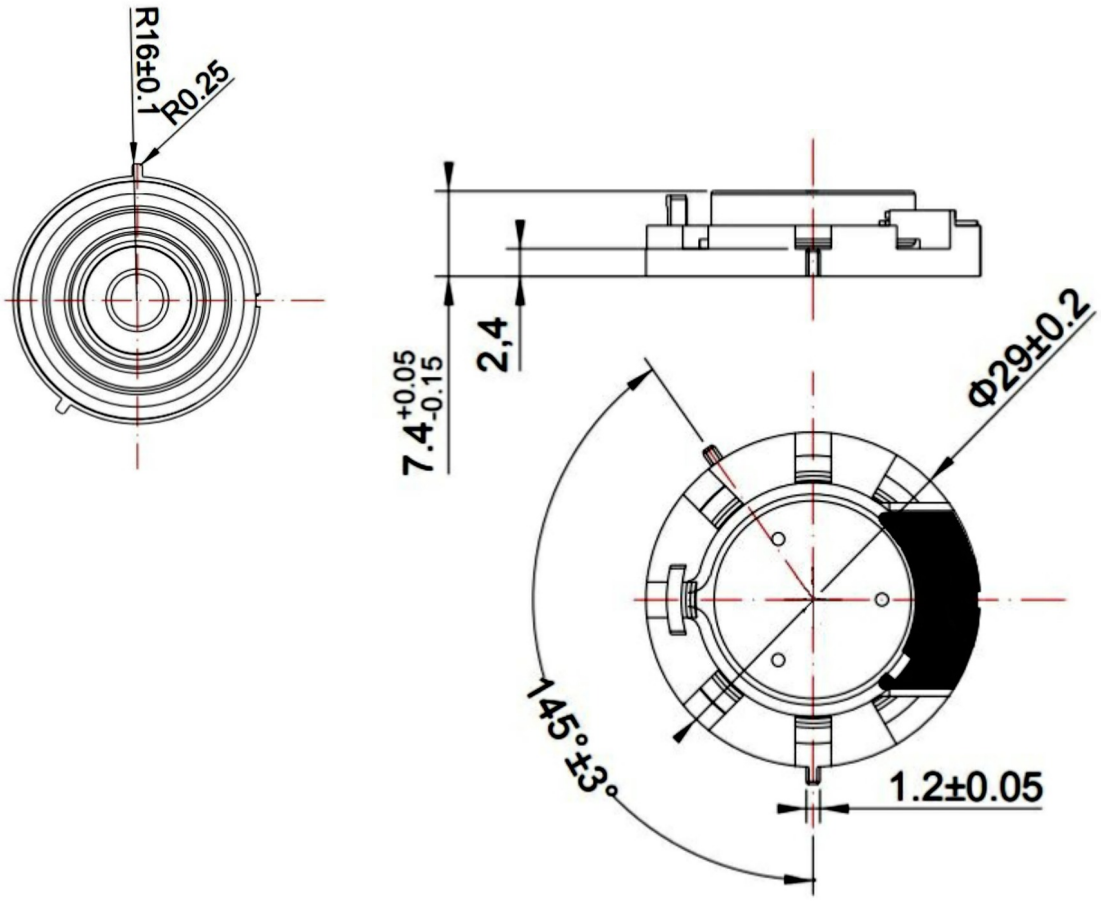

1 . 0	13/07/16	Preliminary	L. Chen	S. Ge	G. Schubert
Revision	Date	Notes	Drawn by	Checked by	Approved by

6. Structure

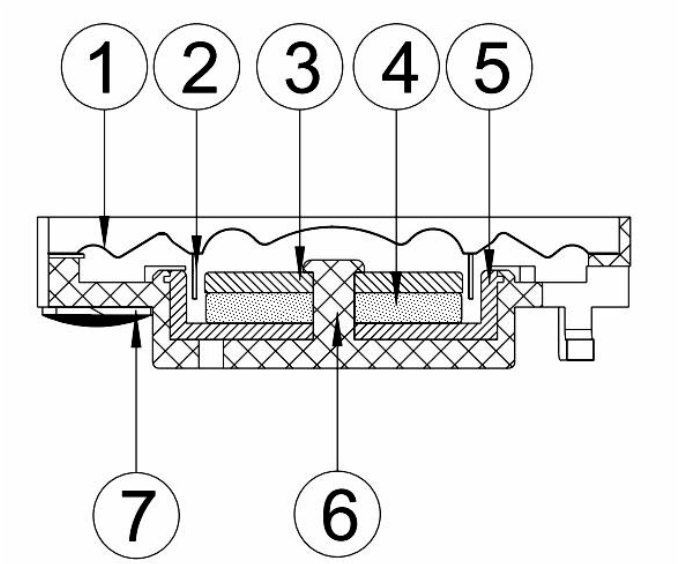

7	PCB	1	FR-4	
6	Frame	1	PPA	
5	YOKE	1	SPCC	
4	Magnet	1	Nd-Fe-B	
3	Plate	1	SPCC	
2	Voice Coil	1	Copper	
1	Diaphragm	1	PEI	
No.	Part Name	Qty	Material	Remarks

1 . 0	13/07/16	Preliminary	L. Chen	S. Ge	G. Schubert
Revision	Date	Notes	Drawn by	Checked by	Approved by

7. Reliability Test

No	Items	Specification
1	High Temperature Test	After being placed in a chamber with 85±3 ºC for 96 hours and then being placed in natural condition for 1 hour, speaker shall be Measured.
2	Low Temperature Test	After being placed in a chamber with -40±3°C for 96 hours and then being placed in natural condition for 1 hour, speaker shall be Measured.
3	Humidity Test	After being placed in a chamber with 85 to 90%R.H. at +40±2°C for 96 hours and then being placed in natural condition for 3 hour, speaker shall be measured.
4	Thermal Shock Test	After being placed in a chamber at +70°C for 1 hour, then speaker shall be placed in a chamber at -30°C for 1 hour.(1 cycle is the below diagram). After 6 above cycles, speaker shall be measured after being placed in natural condition for 1 hour. 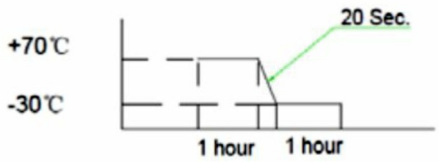
5	Vibration Test	After being applied vibration of amplitude of 1.5mm with 10 to55Hz band of vibration frequency to each of 3 perpendicular directions for 1 hour, then placed in natural condition for 1 hour, speaker shall be measured.
6	Drop Test	The speaker when mounted in the jig which weight 85g~100g, shall with stand 15 times random drops from a height of 1.5 meter to a concrete floor faced with 5mm thick hard wood board. and be nothing mechanical damage.
7	Load test	After being applied loading white noise with input power 0.5W (2Vrms.) for 96 hours, then placed in natural condition for 1 hour, speaker shall be measured.
8	Isulation test	When they are measured with DC 100V the insulation resistance between v.c. terminal and frame must be more than 1 MΩ

After test the speaker S.P.L. Difference shall be within ± 3dB, and the appearance not exist any change to be harmful to normal operation (e.g. Cracks, rusts, damages and distortion)

8. Packing

Each minimum package unit of products shall be in a carton box and it shall be clearly marked with Part Number, quantity and outgoing inspection number.

9) Revision

Rev. No	Date	Page	Description	Sign
10	13/07/16	all	Preliminary	Wang.Xue