Contitec Electronics Ltd. • Martin-Kollar-Str.4 • D-81829 München • Tel. +49 89 99 81 86 30 • Fax. +49 89 3219 50 75 • eMail: sales@contitec.com

Magnetic Buzzer

CA-M858540FT-5040103

Dimension

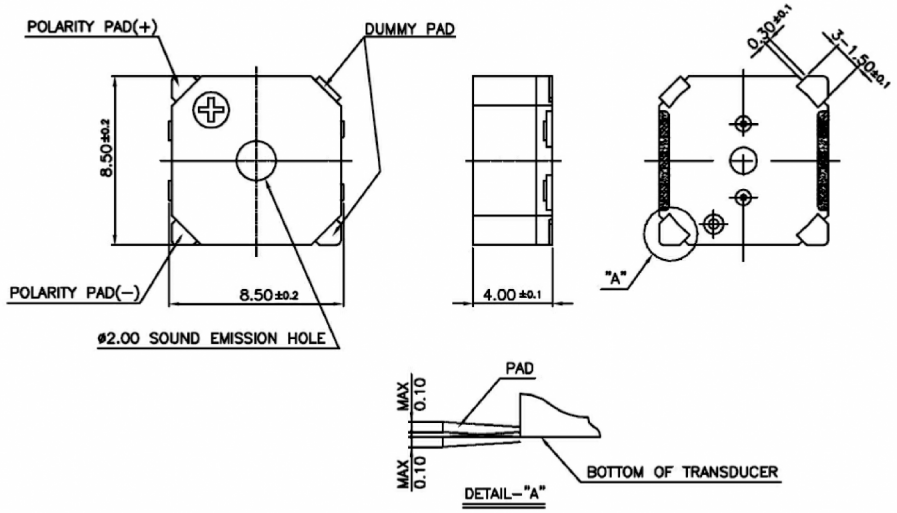

Frequency Response

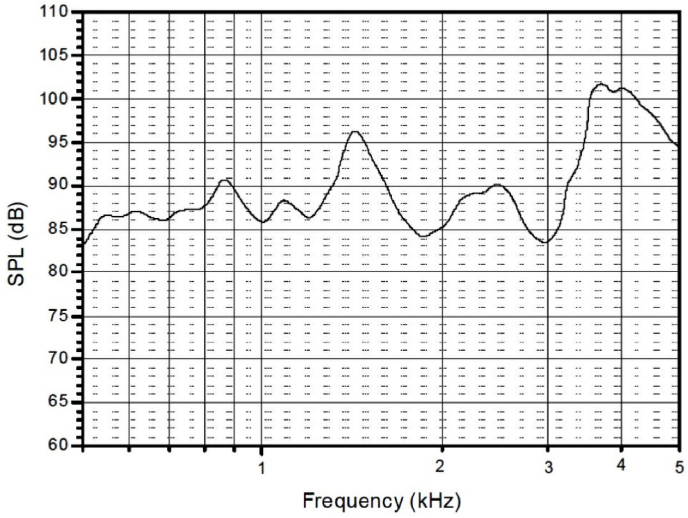

Specification

Rated Voltage (Vpp)	5
Operating Voltage (Vpp)	4 ~ 7
Current Consumption (mA)	150
Coil Resistance	12 ± 3 Ω
S.P.L. (dB Distance at 10cm)	103
Resonance Frequency (Hz)	4000
Operating Temperature Range (°C)	-20~ +70
Storage Temperature Range (°C)	-40 ~ +85