Contitec Components GmbH • Schatzbogen 33 • D-81829 München • Tel. +49 89 99 81 86 30 • eMail: sales@contitec.com

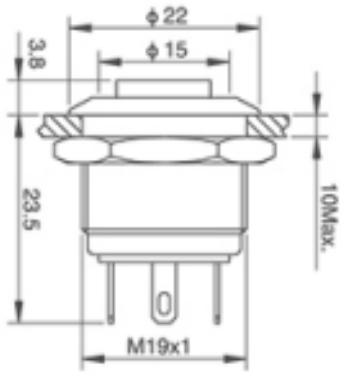

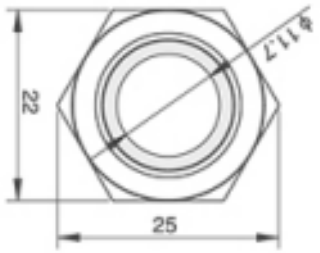

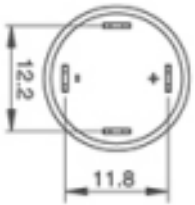

Specification

Mounting hole	Ø 19mm
Switching load	2A/36VDC, 5A/250VAC
Switch combination	1NO
Operation type	Latching
Portection degree	IP65, IK08
LED type & color	Non
LED ratings	Non
Terminal type	Pin (2.8x0.5mm)
Operating force	5.4N
Material body	stainless steel, PBT
Temperature range	-25C + 65C

UNIT	MODEL	TYPE	TOLRANCE	ANGELS	SCALE	VER
MM	PI-Series	Push button	± 0.15	±1.5	1:1	1
DRAWN	L.Shen					
CHECKED	P.Lee		PART NUMBER			
APPROVED	J.Zhang		PI19-H10LJ			
DRAWING No	PI220512	DATE 18/5/19				

This specification is subject to change without notice!

RoHS 2011/65&EU compliant